GEORGIA DEPARTMENT OF PUBLIC HEALTH

Manual for On-Site Sewage Management Systems

SECTION D | PRETREATMENT

Environmental Health Section

SECTION D - PRETREATMENT

1) Preface

An on-site sewage pretreatment unit means a watertight sewage treatment structure designed and constructed to receive raw sewage, separate solids from liquids, digest organic matter through a period of retention and allow clarified effluent to discharge to a subsurface soil absorption system. Such pretreatment units fall into three basic categories:

A. *Septic Tanks* -- which rely predominantly on anaerobic bacterial action for treatment;

B. *Aerobic Treatment Units (ATU's)* -- which introduce atmospheric air into the sewage to promote treatment by aerobic bacteria; and

C. *Combination Units* -- which provide treatment through anaerobic and aerobic bacterial action and/or mechanical filtering, ozonation or ultraviolet irradiation.

2) Septic Tank Pretreatment Units

The primary purpose of the septic tank is to remove solids suspended in the wastewater. It is to provide quiescent conditions for a sufficient period of time to allow the settleable solids to fall to the bottom and the scum to rise to the top. The sludge (accumulated solids) and scum collect in the septic tank for a few years (usually 3-5 years) without disturbing the sedimentation function.

Anaerobic biological reduction of the sludge is a beneficial result of prolonged storage of solids in the tank. The bacteria in the tank deplete any oxygen that may be dissolved in the waste while feeding on the concentrated organics. In the anaerobic environment, facultative and anaerobic bacteria attack the organic molecules reducing them to soluble compounds and gases. The digestion has several effects on tank performance:

A. The sludge volume can be reduced up to 40 percent, reducing the septage pumping frequency;

B. The rising gas bubbles from the sludge blanket may carry active organisms with them, seeding the clear liquid space of the tank to speed decomposition of the solids, which remain suspended in the liquid;

C. The rising bubbles may interfere with effective settling and, thereby, carry suspended solids out of the tank; and

D. A toxic and explosive atmosphere may result from the accumulation of the gases produced in the tank. These toxic gases can be fatal to septage pumpers; and for this reason, no one is advised to enter a septic tank without appropriate personal protective equipment.

3) Precast Concrete Septic Tanks

A. *Liquid Depth* - The minimum requirement for the liquid depth is 36 inches.

B. *Freeboard* - A minimum of nine inches freeboard is required, the freeboard being the air space between the top of the liquid and the bottom side of the lid or cap of the tank.

C. *Length and Width* - The length of the septic tank shall be at least one and one half (1½) times the tank width.

D. *Inlet/Outlet Openings* - There may be a maximum of three-inlet opening knockouts in the tank: one opening or knockout shall be on the tank inlet end; knockouts on sidewalls of the inlet end are optional. Any knockout (s) shall leave a minimum concrete thickness of one inch in the tank wall. They shall accommodate a minimum of four inch or a maximum of six-inch pipe. No knockouts or openings shall be permitted below the tank liquid level. Any inlet opening or knockout shall be positioned such that at least a one (1) inch clearance will exist between the top of any inlet tee and the bottom surface of the tank top or access opening insert. Both the inlet and outlet openings may have seals cast into the tank.

E. *Plastic Pipe Standards* - All plastic plumbing, appurtenances and fittings including the inlet and outlet tees and extension piping shall bear the certification mark of the National Sanitation Foundation International (NSF) for drain, waste and vent or sewer applications. Company products bearing the NSF mark demonstrate their continual compliance with NSF Standard 14 entitled, *Plastic Piping System Components and Related Materials*. As a minimum standard, all plastic pipe used in conjunction with the septic tank shall be type I schedule 40, polyvinyl chloride (PVC) meeting ASTM standard 2665 and bear the NSF certification mark for drain, waste and vent or sewer applications. Inlet and outlet pipes shall be sealed through use of a cast in place low-pressure pipe seal or equivalent neoprene gasket, flexible silicon adhesive or cement.

F. *Inlet/Outlet Tee Standards* - The tees shall extend down a minimum of 25% and a maximum of 50% of the total liquid depth. It shall extend at least 5 inches above liquid level. The installer shall be responsible for proper installation of the tees. The invert of the outlet tee shall be at least two inches lower in elevation than the invert of the inlet tee.

G. *Septic Tank Construction Standards* - The minimum capacity of a septic tank shall be 1000 gallons with manufacturer tolerance of plus (+) or minus (-) four percent (4%). All tanks shall be provided with a concrete partition so that the tank contains two compartments. Tanks without cast in place partitions shall be provided with a concrete partition so that the tank contains two compartments. At the intersection of the partition, for the type with a slip-in partition, the wall thickness at the intersection of the side wall may be reduced to two inches. The partition shall be located at a point not less than two-thirds (2/3) nor more than three-fourths (3/4) the length of the tank from the inlet end. The partition shall provide adequate space for air or gas passage between compartments. The partition shall be cast in such a manner to leave a water passage equal to or greater than the inlet pipe. The passage shall be located below the liquid level a minimum of 25% and a maximum of 50% of the total liquid depth. The partition shall be reinforced through use of six inch by six-inch number 10 gage-welded wire. The reinforcing wire on cast in place partitions shall be bent to form an angle of 90 degrees on the ends in order to form a leg not less than four inches long. When the wire is placed in the mold the four-inch legs should lay parallel with the sidewall wire adjacent to it. It is recognized that there are other methods of constructing a partition or two-compartment tank. Any method other than the one described will be considered on an individual basis for approval by the Department. However, the tank wall thickness must be two and one-half inches thick throughout the tank except for knockouts

and at the intersection of a slip-in type partition with the side walls, where it can be reduced to two inches and the top, which must be three and one-half inches (3 1/2") thick.

H. *Tank Access Openings* - Adequate access openings must be provided in the tank top, which may be either one or two-piece construction. Access shall be provided for cleaning or rodding out of the inlet and outlet pipe, for cleaning or clearing the air or gas passage space above the partition, an entrance for inserting the suction hose for tank pumping, and for routine filter maintenance as needed. This shall be accomplished by properly locating access hole openings having securable, removable covers over the inlet and outlet tees with each having a minimum opening of 15 inches and a maximum of 24 inches as the opening cuts the plane of the bottom side of the top of the tank. The upper surface of the access hole may extend to finished grade or to a depth no deeper than 12 inches below the finished grade. The access hole covers shall be designed and maintained to prevent water inflow; they shall be beveled on all sides in such manner as to accommodate a uniform load of 150 pounds per square foot without damage to the cover or the top of the tank. All below grade access hole covers shall have a handle of steel or other rot-resistant material equivalent in strength to a # 3 reinforcing rod (rebar).

I. *Tank Reinforcing* - Where steel reinforcing is used, a minimum of six-inch by six-inch # 10 gage welded steel reinforcing wire shall be used in the bottom, ends, and sides of the tank; in the top, three eights inch (3/8") reinforcing rods shall be used with a spacing of 12 inches on center each way extending to a minimum distance of two and one-half inches (2 1/2") and a maximum distance of three inches from the outside edge of the tank. The reinforcing wire shall be lapped at least six inches. Concrete cover shall be required for all reinforcement. Reinforcement shall be placed to maximize the structural integrity of the tank. The tank shall be able to withstand a uniform live loading of 150 pounds per square foot in addition to loads to which an underground tank is normally subjected. Examples of this are: the dead weight of the concrete and soil cover, active soil pressure on tank walls and the uplifting force of the ground water. Additional reinforcement shall be required when the loads on a concrete tank are exceeded by subjecting it to vehicular traffic or when the top of the tank is placed deeper than three feet below the finished grade. It is recognized there are methods of reinforcing concrete with fiber in lieu of reinforcing wire; however, when fiber is used, the reinforcing in the top must contain 3/8 inch steel rods (rebar) as specified in the paragraph above. When used, fiber reinforcing shall be 100% virgin polypropylene; fibrillated fiber containing no reprocessed olefin materials, and it must be manufactured specifically for use as concrete secondary reinforcement. Volume per cubic yard shall equal a minimum of 0.1 percent (1.5 pounds). Fibers are for the control of cracking due to drying shrinkage and thermal expansion/contraction, reduction in permeability, increased impact capacity, shatter resistance, abrasion resistance and added toughness. Fiber lengths shall be graded as per manufacturer with a maximum length of two inches. Fibrous concrete reinforcement materials used shall produce concrete conforming to specifications where concrete is tested in accord with ASTM C-1116 TYPE III 4.15 and ASTM C-1116 (reference: ASTM C-1018) performance level 15 outlined in Section 21, Note #17.

J. *Tank and Wall Thickness* - The ends, sides and bottom of the tank must have a minimum thickness of two and one-half inches (2 1/2"). The top must have a minimum thickness of three and one-half inches (3 1/2").

K. *Compressive strength* - A minimum 28-day concrete compressive strength of 4,000 pounds per square inch shall be used in the construction of the septic tank. The concrete shall achieve minimum compressive strength of 3,000 pounds per square inch prior to removal of the tank from the place of manufacture. It shall be the responsibility of the manufacturer to certify that this condition has been met prior to shipment. A septic tank shall be subject to testing to ascertain the strength of concrete prior to its being approved for installation. Recognized devices for testing the strength of concrete include a properly calibrated Schmidt Rebound Hammer or Windsor Probe Test. Accelerated curing in the mold by use of propane gas or other fuels is prohibited, except in accordance with accredited methods and upon prior approval of The Department

L. *Waterproofing* - After curing, tanks manufactured in two sections shall be joined and sealed at the joint by using a mastic, butyl rubber, or other pliable sealant that is waterproof, corrosion-resistant, and approved for use in septic tanks. The sealant shall have a minimum size of one-inch nominal diameter or equivalent. Before sealing, the joint shall be smooth, intact and free of all deleterious substances. Tank halves shall be properly aligned to ensure a tight seal. The sealant shall be provided by the manufacturer. Other methods of waterproofing tanks may be used as specifically approved in the plans and specifications for the tank.

M. *Tank Markings* - All tanks shall bear an imprint, cast or stamp in the wall at the right of the outlet within six inches of the top of the wall. It shall identify the manufacturer and indicate the liquid capacity of the tank in gallons

N. *Tank Figures* - Figure 5.D provides specifications that meet or exceed minimum septic tank design requirements.

4) Precast Concrete Pump/Dosing Tanks

Pump tanks shall meet the construction requirements for septic tanks with the following differences. See also Section E as well as Figure 11.E.

A. *Compartments* - Tanks shall be cast with a single compartment, or, if a partition is provided, the partition shall be cast to contain a minimum of two four-inch diameter circular openings, or equivalent, located no more than 12 inches above the tank bottom.

B. *Dimensions* - There shall be no requirement as to tank length, width, or shape, provided the tank satisfies all other requirements of this Section.

C. *Inlet* - The invert of the inlet openings shall be located within 12 inches of the tank top. No freeboard shall be required in the pump tank.

D. *Waterproofing* - After joining, tanks manufactured in two sections shall be sealed along the joint by using a mastic, butyl rubber or other pliable sealant that is waterproof, corrosion resistant and approved for use in septic tanks. The sealant shall have a minimum size of one-inch diameter or equivalent. Before sealing, the joint shall be smooth, intact, and free of all deleterious substances. Tank halves shall be properly aligned to ensure a tight seal. The sealant shall be provided by the manufacturer. Other methods of waterproofing tanks may be used as specifically approved in the plans and specifications for the tank.

E. *Access Openings* - Tanks shall be vented and accessible for routine maintenance. A watertight access with removable cover shall be provided over the pump with a minimum diameter of 24 inches. The cover shall be beveled on all sides in such manner as to accommodate a uniform load of 150 pounds per square foot without damage to the cover or the top of the tank. All below grade covers shall contain at least a handle made of steel or other rot resistant material equivalent in strength to a # 3 reinforcing rod (rebar). The access cover should extend to finished grade or to no deeper than 12 inches below finished grade. The covers shall be designed and maintained to prevent surface water inflow. Larger or multiple access covers shall be provided when two or more pumps are required. There must be a threaded union on the pump discharge pipe that will allow pump removal without entry into the tank. Access lids and electrical controls shall be secured against unauthorized opening or ingress. Access risers shall be joined to the tank top and sealed in accordance with D.19 of this Manual.

F. *Pump Tank Markings* - All pump tanks shall bear an imprint, cast or stamp in the wall at the right of the outlet within six inches of the top of the wall. It shall identify the manufacturer and indicate the liquid capacity of the tank in gallons.

5) Septic Tanks Constructed on Site

Septic tanks constructed on site of cast-in-place concrete shall be constructed to conform with the requirements of precast concrete septic tanks except as follows:

A. *Minimum Wall Thickness* - Cast-in-place concrete septic tanks shall have a minimum wall thickness of four inches.

B. *Minimum Bottom Thickness* - The bottom and top of the constructed on-site septic tank shall be poured reinforced concrete with a minimum thickness of four inches.

C. *Maximum Liquid Depth* - For large capacity (5,000 gallons or more) cast-in-place concrete tanks, maximum liquid depth shall be 66 inches.

6) Fiberglass Reinforced Plastic Septic Tanks

A. *Definitions* - The following general definitions shall apply in the interpretation of these standards:

1. **ASTM.** Denotes nationally recognized standards established by the American Society for Testing and Materials.
2. **Fiberglass Reinforced Plastic.** A fibrous glass and plastic mixture, which exhibits a high strength to weight ratio and is highly resistant to corrosion.
3. **Flexural Modulus of Elasticity.** A measure of the stiffness of material.
4. **Flexural Strength.** A measure of the ability of a material to withstand rupture when subjected to bend loading.
5. **Gel Coating.** A specially formulated polyester resin, which is pigmented and contains filler materials, the purpose of which is to provide a smooth, pore-free, watertight surface for fiberglass reinforced plastic parts.

6. **National Sanitation Foundation (NSF) Standard #14.** The NSF standard relating to thermoplastics which have been tested and found satisfactory for potable water supply uses, for drain, waste and vent application.
7. **Resin.** Any number of commercially available polyester products used in the manufacture of fiberglass reinforced products which serve to contribute mechanical strength, determine chemical and thermal performance, and prevent abrasion of fibers, and which must be physically and/or chemically determined to be acceptable for the environment and free from inert filler materials.
8. **Sealant.** A bonding agent specifically designed to bond joining sections of fiberglass reinforced plastic products to each other in such a manner so as to create a durable, long-lasting, watertight seal which does not alter the structural integrity or strength of the two joined fiberglass products.
9. **Fiberglass Septic Tank.** The minimum capacity of a septic tank shall be 1000 gallons. This is an approved watertight tank designed or used to receive the discharge of sewage from a building sewer and to effect separation of solids from liquids, retaining the solids for organic decomposition and discharging sewage effluent to an absorption field or other sewage management system. All tanks shall be provided with a partition so that the tank contains two compartments. The partition shall be located at a point not less than two-thirds (2/3) nor more than three-fourths (3/4) the length of the tank from the inlet end. The partition shall provide adequate space for air or gas passage between compartments. The partition shall provide for at least two passages with each equal to or greater than the cross-sectional area of the inlet pipe. The passage shall be located below the liquid level a minimum of 25% and a maximum of 50% of the total liquid depth.
10. **Ultimate Tensile Strength.** A measure of the resistance of a material to longitudinal stress, measured by the minimum longitudinal stress required to rupture the material.

B. *General Requirements* - The following general requirements are applicable to fiberglass reinforced plastic septic tanks as defined herein and approved design standards and structural properties shall be not less than those as stated herein:

1. *Materials* - Resins and sealants used in the tank manufacturing process shall be capable of effectively resisting corrosive influences of liquid components of sewage, gases generated by the digestion of sewage, and soil burial. Materials used shall be formulated to withstand vibration, shock, normal household chemicals, earth and hydrostatic pressure both when full and empty. Not less than thirty percent (30%) of the total weight of the tank shall be fiberglass reinforcement. For tanks not exceeding 1500 gallons capacity, the minimum wall thickness shall be 1/4 inch; however, isolated small spots may be as thin as 80% of the 1/4 inch minimum thickness.
2. *Inner Coating* - Internal surfaces shall be coated with an appropriate gel coating to meet the requirements of Paragraph B.1 above.
3. *Physical Properties* - Tanks shall be constructed so that all parts of the tank meet the following requirements:

a. Ultimate tensile strength - Minimum of 12,000 PSI when tested in accordance with ASTM D638-98, Standard Method of Test for Tensile Properties of Plastics.

b. Flexural Strength - Minimum of 19,000 PSI when tested in accordance with ASTM D790-98, Standard Method of Test for Flexural Properties of Plastic.

c. Flexural Modulus of Elasticity – (Tangent) Minimum of 800,000 PSI when tested in accordance with ASTM D790-98, Standard Method of Test for Flexural Properties of Plastics.

4. *Watertight Integrity* - Tanks shall be constructed to be watertight for the designed life of the tank. Lids or covers shall be sufficiently tight when installed to preclude the entrance of surface or ground water into the tank.

5. *Longevity* - Proof from an independent testing laboratory shall be submitted substantiating a minimum life expectancy of twenty years of service for the intended use of the tank and appurtenant components such as necessary sealants, connective fastenings, resins, etc.

6. *Safety* - As a safety measure, provision shall be made in the construction of septic tank lids or covers to preclude unauthorized entry or removal when the use of the tank necessitates positioning of access openings at or above ground level.

7. *Workmanship* - Tanks shall be of uniform thickness and free from defects that may affect their serviceability or durability. Completed tanks are to present a smooth inside finish free of spalls, pits and honeycombs. Plant quality control shall be sufficient to maintain a high degree of uniformity in tank quality.

C. *Detail Requirements* - Detail requirements for design and construction shall be not less than that specified herein and shall be in conformity with recognized National Standards for design and construction and in accordance with Chapter 511-3-1.

1. *Capacity and Design Limits* - Capacity of tanks shall comply with the requirements as set forth in Chapter 511-3-1-.05 (3).

2. *Dimensions* - The inside length of a horizontal cylindrical tank shall not be less than twice the width nor more than three times the width. The liquid depth of septic tanks with capacities of less than 6,000 gallons shall not be greater than five feet. With septic tank capacities from 6,000 to 10,000 gallons, liquid depth may increase to a maximum of six feet. At least fifteen percent of the total volume of the tank shall be above the liquid level. If other shapes are proposed, specifications must be submitted to the Department for approval.

3. *Compartments* - Multiple-compartmented septic tanks shall be used. The first compartment shall have a minimum capacity of two-thirds of the total tank capacity. Flow between compartments shall be by means of at least one opening in the compartment wall, with a cross-sectional area equivalent to the area of the building sewer, that leads into the tank, with the passage to be located below the liquid depth a minimum of 25% and a maximum of 50% of the total liquid depth. The partition shall provide adequate space for air or gas passage between compartments.

4. *Inlet* - Provisions shall be made for the building sewer to enter the center of one end of the septic tank two inches above the normal liquid level of the tank. A tee shall be constructed as an integral part of the tank to receive the building sewer or as an alternative, an integrally constructed baffle may be used. If baffles are used, suitable integrally fitted sleeves or collars shall be provided in the inlet openings of the tank to provide surface areas sufficient to insure capability of watertight bonding between the tank and the inlet sewer. If the tee or baffle is constructed of plastic materials, it shall meet NSF Standard #14 for drain, waste, and vent system application. If fiberglass reinforced plastic is used, it shall be of the same constituency as material of which the tank is constructed. The inlet tee or baffle shall extend down a minimum of 25% and a maximum of 50% of the total liquid depth. It shall extend at least five inches above liquid level and be placed and secured in a vertical position so as to be watertight and preclude dislodgement during installation, operation or maintenance activities.
5. *Outlet* - Provisions shall be made for the outlet sewer to receive the discharge from the tank by providing an opening in the center of the end of the tank opposite the inlet, the invert elevation of which shall be at the liquid level of the tank. A tee shall be constructed as an integral part of the tank to connect to the outlet sewer or as an alternative, an integrally constructed baffle may be used. If baffles are used, suitable integrally fitted sleeves or collars shall be provided in the outlet opening of the tank to provide surface areas sufficient to insure capability of watertight bonding between the tank and outlet sewer. If the tee or baffle is constructed of plastic material, it shall meet NSF Standard #14 for drain, waste and vent system application. If fiberglass reinforced plastic is used, it shall be of the same constituency as material of which the tank is constructed. The outlet tee or baffle shall extend down a minimum of 25% and a maximum of 50% of the liquid depth and be placed and secured in a vertical position so as to be watertight and preclude dislodgement during installation, operation or maintenance activities. The tee shall extend at least five inches above liquid level. A one-inch opening between the top of the inlet tee and top of the tank shall be provided to permit free passage of air or gas between the tank and the house sewer vent.
6. *Access Openings* - Openings in the top of the septic tank shall be provided over the inlet and outlet tees or baffles with a minimum cross-sectional width of 15 inches with a minimum area of 225 square inches, sufficient to enable maintenance service to such tees or baffles; access openings in the top of the septic tank shall be provided over each compartment in sufficient number to enable effective removal of solids from all parts of the tank. The access openings may extend to finished grade or to a minimum of 12 inches below finished grade. Covers for the access openings must be provided that are securable and water tight.
7. *Identifying Markings* - All tanks shall bear an imprint, cast or stamp in the wall at the right of the outlet within six inches of the top of the wall. It shall identify the manufacturer and indicate the liquid capacity of the tank in gallons.

7) Polyethylene Septic Tanks

A. *General Requirements* - The following general requirements are applicable to polyethylene plastic septic tanks.

1. *Materials* - Resins and sealants used in the tank manufacturing process shall be capable of effectively resisting corrosive influences of liquid components of sewage, gases generated by the digestion of sewage, and soil burial. Materials used shall be formulated to withstand vibration, shock, normal household chemicals, earth and hydrostatic pressure both when full and empty.
2. *Physical Properties* - Tanks shall be so constructed that all parts of the tank meet the following requirements:
   a. Ultimate tensile strength - Minimum 2,400 PSI when tested in accordance with ASTM D 638- 01, Standard Method of Test for Tensile Properties of Plastics.
   b. Flexural Strength - Minimum 80,000 PSI when tested in accordance with ASTM D790-01, Standard method of Test for Flexural Properties of Plastics
3. *Watertight Integrity* - Tanks shall be so constructed as to be watertight for the designed life of the tank. Lids or covers shall be sufficiently tight when installed to preclude the entrance of surface or ground water into the tank.
4. *Longevity* - Proof from an independent testing laboratory shall be submitted substantiating a minimum life expectance of twenty years of service for the intended use of the tank and appurtenant components such as necessary sealants, connective fastenings, resins, etc.
5. *Safety* - As a safety measure, provision shall be made in the construction of septic tank lids or covers to preclude unauthorized entry or removal when the use of the tank necessitates positioning of access openings at or above ground level.
6. *Workmanship* - Tanks shall be of uniform thickness and free from defect that may affect their serviceability or durability. Completed tanks are to present a smooth inside finish free of spalls, pits and honeycombs. Plan quality control shall be sufficient to maintain a high degree of uniformity in tank quality.

B. *Detail Requirements* - Detail requirements for design and construction shall be not less than that specified herein and shall be in conformity with recognized National Standards for design and construction in accordance with 511-3-1 as follows:

1. *Capacity and Design Limits* - Capacity of tanks shall comply with the requirements as set forth in Chapter 511-3-1-.05 (1) and Chapter 511-3-1-.05 (3).
2. *Dimensions* - The inside length of a horizontal cylindrical tank shall not be less than twice the width nor more than three times the width. The liquid depth of septic tanks with capacities of less than 6,000 gallons shall not be greater than five feet. With septic tank capacities from 6,000 to 10,000 gallons, liquid depth may be increased to a maximum of six feet. At least fifteen percent of the total volume of the tank shall be above the liquid level. If other shapes are proposed, specifications must be submitted to the Department for review and approval.
3. *Compartments* - Multiple-compartmented septic tanks shall be used, and when used, the first compartment shall have a minimum capacity of two-thirds of the total tank capacity. Flow between compartments shall be by means of at least one opening in the compartment wall, with a cross-sectional area equivalent to the area of the building

sewer, that leads into the tank, with the passage to be located below the liquid level a minimum of 25% and a maximum of 50% of the total liquid depth. The partition shall provide adequate space for air or gas passage between compartments.

4. *Inlets* - Provisions shall be made for the building sewer to enter the center of one end of the septic tank two inches above the normal liquid level of the tank. A tee shall be constructed as an integral part of the tank to receive the building sewer. As an alternative, an integrally constructed baffle may be used. If baffles are used, suitable integrally fitted sleeves or collars shall be provided in the inlet openings of the tank to provide surface areas sufficient to insure capability of watertight bonding between the tank and inlet sewer. If the tee or baffle is constructed of plastic material, it shall meet NSF Standard #14 for drain, waste and vent system application. The inlet tee or baffle shall extend down to a minimum of 25% and a maximum of 50% of the liquid depth and be placed and secured in a vertical position so as to be watertight and preclude dislodgement during installation, operation or maintenance activities.
5. *Outlet* - Provisions shall be made for the outlet sewer to receive the discharge from the tank by providing an opening in the center of the end of the tank opposite the inlet, the invert elevation of which shall be at the liquid level of the tank. A tee shall be constructed as an integral part of the tank to connect to the outlet sewer or as an alternative, an integrally constructed baffle may be used. If a baffle is used, suitable integrally fitted sleeves or collars shall be provided in the outlet opening of the tank to provide surface areas sufficient to insure capability of watertight bonding between the tank and outlet sewer. If the tee or baffle is constructed of plastic material, it shall meet NSF Standard #14 for drain, waste and vent system application. The outlet tee and any tee used as an opening for the baffle shall extend eighteen inches below the design liquid level and be placed and secured in a vertical position so as to be watertight and preclude dislodgement during installation, operation or maintenance activities. A one-inch opening between the top of the inlet tee and the top of the tank shall be provided to permit free passage of gas back to the house vent.
6. *Access Openings* - Openings in the top of the septic tank shall be provided over the inlet and outlet tees or baffles, with a minimum cross-sectional width of 15 inches with a minimum area of 225 square inches, sufficient area to enable maintenance service to such tees or baffles; access openings in the top of the septic tank shall be provided over each compartment in sufficient number to enable effective removal of solids from all parts of the tank. The access openings may extend to finished grade or to a minimum of 12 inches below finished grade. Covers for the access openings must be provided that are securable and water tight.
7. *Identifying Markings* - All septic tanks shall bear an imprint, cast or stamp in the wall at the right of the outlet within six inches of the top of the wall. It shall identify the manufacturer and indicate the liquid capacity of the tank in gallons.

8) Filtration Devices for Residential Gravity Flow Septic Tank Systems

A. *NSF Certification* - Filtration devices for residential gravity flow septic tank systems shall be certified by NSF International or an independent organization accredited by the

American National Standards Institute (ANSI) to determine compliance with the requirements of the most current ANSI/NSF Standard 46, Section 10 including but not limited to having the make and model of the effluent filter published in the accredited organizations public document and/or publicly available website that lists the company's name, address, telephone number and those products and model numbers successfully tested against the standard. These outlet filtration devices shall be accepted for installation and use in the state of Georgia.

B. *NSF Marking* - Certified filtration devices shall bear a registered trademark that includes reference to ANSI/NSF Standard 46.

C. *Filter Components* - Certified components (i.e. Filter casing or filter housing) intended to be used with other components to make a complete functional system, as defined by ANSI/NSF Standard 46, should bear a unit mark. Housing components intended to replace outlet tees (to make a complete functional system) must meet the provisions of DPH Rule 511-3-1-.05 (1) and Section D of the Department's Manual for On Site Sewage Management Systems.

D. *Model Number* - Each filtration device or filtration system shall bear a permanently marked model designation on the device.

9) Aerobic Treatment Units

A. *Introduction*

1. *Definition* - Aerobic treatment units (ATUs) provide aerobic biodegradation or decomposition of wastewater constituents by bringing the wastewater in contact with air mechanically. ATUs come in different configurations and sizes, and incorporate a variety of approaches, including air pumps, air injectors, lift pumps and biological-contact surfaces (such as pipes, fabric, grids, gravel and rotating disks). Other alternative sewage treatment technologies, such as sand filter systems, may also be described by this characterization; however, they are not classified by the Department as aerobic treatment units or systems.

2. *Pretreatment Prior to Disposal* - ATUs are stand-alone sewage treatment systems, providing wastewater treatment prior to disposal in a subsurface absorption system or pretreatment to other alternative methods of wastewater treatment and/or disposal.

3. *Wastewater Influent Characteristics* - The standards presented in this regulation apply to the use of ATUs for the treatment of sewage from residences (single-family or multi-family); wastewater that can be described as having the constituency and strength combined 5-day carbonaceous biochemical oxygen demand ($CBOD_5$) typical of wastewater from domestic households (See Table 4.D). Some residential facilities or settings (group homes, extended care facilities, nursing homes, etc.) may generate sewage that is more complex and more difficult to treat and may better be described as non-residential. Similarly, other non-residential facilities (such as restaurants, dental or medical clinics, veterinary clinics, beauty shops, laundromats, etc.) may produce high-strength wastewater (significantly exceeding $CBOD_5$ levels acceptable for domestic households) making treatment difficult. Standards for ATUs designed to treat non-

residential wastewater or high-strength wastewater are reviewed for compliance by the Georgia Environmental Protection Division.

B. *Performance Standards*

1. *Listing* - Upon request, the Technical Review Committee (hereafter, the Committee) reviews proprietary ATU products; when the Committee determines that data provided by the manufacturer or designated manufacturer representative demonstrates that the product meets or exceeds the testing requirements, it will be added to the Approved List of the Department for such systems. An ATU must be included on the list of Approved Systems before local health officers may issue permits for installation of on-site sewage systems incorporating such products.

2. *Testing Criteria*

   a. Aerobic treatment units must be tested by a qualified third-party organization independent from the manufacturer.

   b. The Department and the Committee uses as performance and test criteria, the product standards, testing protocol and application standards for ATUs established by the National Sanitation Foundation International (NSF). Testing performed by independent ANSI accredited third-party test facilities will be reviewed by the Committee and approved by the Department on a case-by-case basis.

   c. The testing criteria and performance levels for ATUs designed to treat residential sewage must at least be equal to that specified and required in the current ANSI/NSF Standard Number 40 - Residential Wastewater Treatment Systems. This applies to ATUs submitted to the Department for review and listing after the approval date of these standards.

C. *Application Standards*

1. *Listed Products* - Only ATUs listed on The Department's List of Approved Systems and Products shall be permitted by local health officers for systems installation within their jurisdiction. Only the specific models listed are approved. Other ATU models and/or products in manufacturers' product lines are not approved for use until they have been reviewed and approved by the Committee and placed on the Department list of Approved Systems and Products.

2. *Permitting and Installation Requirements*

   a. Installation and if required, operational permits, must be obtained from the appropriate local health officer prior to installation and use.

   b. Any variances or changes in the installation or use of these devices different from the conditions, allowances, or criteria contained in the Department's approval and the associated installation permit, issued by the local health authority, would void both the approval and the installation permit; such an altered system would then be classified as an experimental system, which would require further review by the Committee and a different type of approval by the Department.

   c. An ATU must be installed by an authorized representative of the manufacturer approved by the Department.

d. Where an ATU is utilized, the bottom of the infiltrative surface elevation must be at least 12" above maximum seasonal high groundwater table, creviced or porous bedrock or strata of impermeable soil or bedrock (including very slowly permeable soil).

e. There must be sufficient acceptable land area on the property for installation of the ATU and a 100% set aside area for future replacement, should such ever be needed.

3. *Pretreatment* - External pretreatment for solids separation and settling will be provided by a conventional, single compartment septic tank equivalent, at minimum, to the expected 24-hour sewage flow for the residence or facility. Any ATU tested using ANSI/NSF Standard 40, or equivalent, may be excluded from the requirement of a separate pretreatment tank if such a “trash compartment or tank” is part of their approval. The “trash tank” used for pretreatment must meet the minimum structural standards as established by the Manual and approved for use by the Department. An inlet and outlet “tee” as described in the Manual, must be installed in the pretreatment tank.

4. *ATU Size/Model Selection* - For residential wastewater flows, in the absence of actual flow data, ATU sizing will be based upon a projection of 150 gallons per day (gpd) flow per bedroom. The size ATU needed will be determined by manufacturer recommendations for the ATU capable of treating the actual or projected flow.

5. *Access Ports* - Ground level access ports must be sized and located to facilitate the installation, removal, sampling, examination, maintenance, and servicing of components and compartments that require routine maintenance and inspection. In accordance with the manufacturer operation and maintenance manual, access ports must be of sufficient size, design and location so as to allow for the following:

   a. Visual inspection and removal of all mechanical or electrical components;

   b. Visual inspection and removal of any component which is to be periodically cleaned or replaced;

   c. Visual inspection and sampling;

   d. Removal (manually or by pumping) of collected residuals; and

   e. Protection against unauthorized intrusions. Acceptable protective measures include, but are not limited to:

      (1) A padlock;

      (2) A cover that can be removed only with tools; and

      (3) A cover having a minimum net weight of 65 pounds (29.5 kilograms).

   f. Protection from ground water inflow.

6. *Failure Sensing and Signaling Equipment* - The ATU must possess a mechanism or process capable of detecting failures of electrical and mechanical components critical to the treatment processes and delivering a visible and audible alarm signal to notify the owner of such failures that result in:

a. Water level above normal operating specifications; or

b. Aeration equipment not functioning within manufacturer specified limits.

7. *Alarm Requirements* - Both the visual and audible alarm signals must be conspicuous from a distance of 50 feet from the system and its appurtenances. The audible alarm signal must produce sound levels between 60 and 75 dbA at a distance of five feet away from the unit.

8. *Separate Circuits Required* - The visual and auditory signals must continue to be functional in the event of an electrical, mechanical, or hydraulic malfunction of the system.

9. *Data plate* - An ATU must have two permanent and legible data plates. One data plate must be affixed to the front of the electrical control box. The second data plate must be placed on the tank, aeration equipment assembly, or riser at a location accessed during maintenance cycles and inspections. The data plates must include:

   a. Manufacturer's name and address;

   b. Model number;

   c. Serial number (required on one data plate only);

   d. Rated daily hydraulic capacity of the system; and

   e. The system classification as determined by performance testing and evaluation.

   A clearly visible label or plate that provides instructions for obtaining service must be permanently located near the failure signal.

10. *Extended Electrical Power Interruption* - ATU performance begins to decrease as a result of extended power failure (generally over 48 to 72 hours). In areas subject to extended power interruptions, the benefit of providing an emergency power supply should be considered in the overall sewage system design/review process.

D. *Operation & Maintenance Standards*

1. *General*

   a. The residence or facility owner is responsible for assuring proper operation and providing timely maintenance of the ATU and all other components of the on-site sewage treatment and disposal system.

   b. The manufacturer must provide the Department and local health authority annually a list of ATU's sold/installed. As a minimum, the list must contain in table format the following:

      (1) County where installed;

      (2) City where installed;

      (3) Owner's name;

      (4) Owner's street address;

(5) Owner's zip code;

(6) Owner's phone number;

(7) Tank serial number;

(8) Installation date; and

(9) Date warranty ends and, if different, date service contract ends.

c. The ATU authorized representative must instruct, or assure that instruction is provided to the residence or facility owner in proper operation of the ATU. Emphasis must be placed on those aspects that relate to operating and maintaining the ATU within its normal operating range. This should include instruction regarding items in Product Manual (s) below.

2. *Product Manuals* - Manufacturers must provide authorized representatives with product literature intended to accommodate all persons who may be involved in the installation, upkeep, or repair of the systems. This information may be provided in the form of separate, discrete manuals or may be combined into one comprehensive manual, as the manufacturer deems appropriate. The manual must be written so as to be easily understood by the intended reader. As a minimum the manual must include specific instruction for: System Installation, Operation and Maintenance, and Trouble Shooting and Repair as described below.

a. *System Installation* - Manufacturers must provide comprehensive and detailed installation instructions to authorized representatives and the local health officer. At a minimum the following must be included:

(1) A numbered list of system components and an accompanying illustration, photograph or print in which the components are respectively identified;

(2) Design, construction, and material specifications for the system's components;

(3) Wiring schematics for the system's electrical components;

(4) Off-loading and unpacking instructions including safety considerations, identification of fragile components, and measures to be taken to avoid damage to the system;

(5) A process overview of the function of each component and the expected function of the entire system when all components are properly assembled and connected;

(6) A clear definition of system installation requirements including plumbing and electrical power requirements, ventilation, air intake protection, bedding, hydrostatic displacement protection, water tightness, slope and miscellaneous fittings and appurtenances;

(7) A sequential installation procedure;

(8) Repair or replacement instructions in the event that a system possesses flaws that would inhibit proper functioning and a list of sources where replacement components can be obtained; and

(9) A detailed start-up procedure.

b. *Operation and Maintenance* - Manufacturers must provide comprehensive and detailed operation and maintenance instructions to the authorized representatives, to the local health officer and to the owner. Comprehensive operating instructions must clearly delineate proper function of the system, operating and maintenance responsibilities of the owner and authorized service personnel and service related obligations of the manufacturer. At a minimum, the following must be included:

(1) A maintenance schedule for all components; copies of the periodic maintenance reports must be provided to the owner and the local health authority;

(2) Requirements and recommended procedures for the periodic removal of residuals from the system;

(3) A detailed procedure for visual evaluation of system component functions;

(4) A description of olfactory and visual techniques for the evaluation of system effluent and mixed liquor;

(5) A list of household substances that, if discharged to the system, may adversely affect the system, operational processes and/or the environment.

c. *Trouble Shooting and Repair* - Manufacturers must provide comprehensive and detailed trouble-shooting and repair instructions to authorized representatives, the local health officer, and to the owner. At a minimum, the following must be included:

(1) A guide for visually evaluating the system and narrowing the scope of the problem based on effluent characteristics, system operation, and history; detailed methods and criteria must be included;

(2) A sequential method for isolating specific component failure;

(3) A step-by-step guide for repairing or replacing all system components; and

(4) The name and telephone number of an appropriate service representative to be contacted in the reference to the system data plate in the event that a problem arises or service is required to obtain this information.

E. *Service Related Obligations*

1. *Initial Service Policy:*

a. A three-year initial service policy must be furnished to the owner by the manufacturer or the authorized representative; the cost of the initial service policy must be included in the original purchase price. The initial policy must contain provisions for six inspection/service visits (scheduled once every six months over the three-year period) during which electrical, mechanical, and other applicable components are inspected, adjusted and serviced.

b. The initial service policy must contain a clause that states that the owner must be notified in writing about improper system operations that cannot be remedied at the time of inspection, and that the written notification must include an estimated date

of correction. If the malfunction is expected to cause a sewage backup into the dwelling or a surface discharge of effluent, then a copy must be furnished to the local health authority.

c. Service providers must maintain accurate records of their Service Contracts, customers, and time lines for renewal of service contracts.

2. *Submission of Maintenance Reports* - The manufacturer or licensed distributor shall submit to the Department and county health authority by March 15th reports of each visit for maintenance conducted during the previous year. Information such as name and address of the owner, date of visit, reason for the visit, and corrective action taken shall be included in the report. Failure to submit timely reports may result in the suspension of the license to market the system in Georgia. The NSF Onsite Monitoring Program or equivalent, accessible by the Department, district office, county, and homeowner, may be used in lieu of the maintenance reporting requirements if such reporting system includes the information required by the Department.

3. *Extended Service Policy* - A manufacturer or authorized representative must make available, for purchase by the owner, an extended service policy with services provided as extensive as or greater than those in the initial service policy. The owner must obtain such a service policy or insure that equivalent maintenance and repair service is provided. Maintenance and the periodic reporting requirements noted in the paragraph above must continue for the life of the system.

4. *Stand-by Parts* - In the event that a mechanical or electrical component must undergo off-site repairs, the local authorized representative must maintain a stock of mechanical and electrical components that may be temporarily installed until repairs are completed.

5. *Availability of Service* - Emergency service must be available within 48 hours of a service request.

6. *Limited Warranty* - The manufacturer must warrant all components of their ATU to be free from defects in material and workmanship for a minimum of two years from the date of installation. The manufacturer must fulfill the terms of the warranty by repairing or exchanging any components that, in the manufacturer's judgment, show evidence of defect.

7. *Owner's Manual* - Each ATU must be accompanied by a manufacturer prepared owner's manual. The authorized representative must provide copies of the manual to the owner and the local health officer, at the time of system installation.

8. *Contractor/Service Provider* - Any contractor installing or performing work on an Advanced Treatment System (ATS) must be provided with a certificate or card that demonstrates their completion of the manufacturer's certification program. All ATS manufacturers must submit a listing of their certified installers and service providers with their annual maintenance reports. Any additions or deletions to this list must be submitted to the Department and county.

10) Class I Effluent Systems

A. *Other Types of Pretreatment Systems* - The Department recognizes other types of pretreatment systems are capable of producing a Class I effluent. Pretreatment systems capable of producing a Class I effluent must meet the following testing requirements. Third party testing from an accredited testing facility acceptable to the DPH Technical Review Committee showing the system meets current ANSI/NSF Standard 40 testing requirements for Class I effluent.

B. *Annual Listing* - The manufacturer shall provide the Department and local health authority an annual listing of system installations. At a minimum the list must contain the following information:

1. County where installed;
2. City where installed;
3. Owner's name;
4. Owner's address;
5. Owner's zip code;
6. System serial number;
7. Installation date;
8. Date the service policy ends;
9. Date warranty ends, and if different, date service contract ends."

C. *Service-Related Obligations*

1. *Initial Service Policy*

   a. The manufacturer or the authorized representative must furnish a three-year initial service policy to the owner; the cost of the initial service policy must be included in the original purchase price. The initial service policy must contain provisions for annual service visits (a minimum of one service visit/year) during which electrical, mechanical, and other applicable components are inspected, adjusted and serviced.

   b. The initial service policy must contain a clause that states that the owner will be notified in writing about improper operations that cannot be remedied at the time of inspection and that written notification must include an estimated date of correction. If the malfunction is expected to cause a sewage backup into the dwelling or a surface discharge of effluent, then a copy must be furnished to the local health authority.

   c. Service providers must maintain accurate records of their service contracts, customers and time lines for renewal of service contracts.

2. *Submission of Maintenance/Service Reports* - The manufacturer or licensed distributor shall submit to the Department and county health authority by March 15th reports of maintenance/service visits conducted during the previous year.

3. *Extended Service Policy* - The manufacturer or authorized representative must make available, for purchase by the owner, an extended service policy with services equal to or greater than those provided by the initial service policy. The owner must obtain such

a service policy or insure that equivalent maintenance is provided. Maintenance and periodic reporting must continue for the life of the system.

4. *Owner's Manual* - A manufacturer prepared owner's manual must accompany each Advanced Treatment System. The authorized representative must provide copies of the manual to the system owner at the time of installation.

11) Nitrogen Reduction

A. *Testing Criteria* - In areas of the State which have been identified that must reduce nitrogen in surface and ground water, the Department has adopted NSF/ANSI Standard 245, or equivalent, to evaluate residential wastewater technologies designed for nitrogen reduction. Technologies tested against Standard 245 must either be Standard 40 certified or be evaluated against Standard 40 and must meet all requirement of Aerobic Treatment Units found in this Manual including but not limited to application standards, operation and maintenance, and service related obligations.

B. *Performance Standards* - A pretreatment system must produce the following effluent concentrations to meet Standard 245:

1. CBOD5 - 25 mg/L
2. TSS - 30 mg/L
3. Total Nitrogen - at least a 50% average of influent TKN
4. pH - 6.0 to 9.0

12) Portable Toilets

Portable toilets fitted with a sewage receptacle of easily cleanable and impervious construction, which is easily accessible for cleaning, may be used at construction sites or places of public assembly of a temporary nature; provided such toilets are provided in numbers adequate to serve the anticipated usage and are cleaned and serviced regularly, and the waste removed from them is disposed of in a manner approved by the County Board of Health in accordance with The Department of Public Health's Chapter 511-3-6, Titled *Portable Sanitation Contractors*.

13) Incinerator Toilets

Where waste generation is greatly limited, such as a remote office staffed by a limited number of people, and where no waste water from kitchens, bath or laundry is expected, incinerator toilets which use gas or electrical energy to incinerate feces and urine in timed cycles may be considered. The waste is reduced to a dry ash product, which must be removed periodically. Disposal of the ash should be accomplished by land burial and covered with a minimum earth cover of six inches. The use of such toilets where kitchen, laundry, bath and toilet waste are expected is not recommended since a conventional septic tank system would be required to treat the kitchen, bath and laundry waste. Incinerator toilets must be certified by the National Sanitation Foundation as meeting the current Standard #41 or certified by the manufacturer as meeting a nationally recognized standard for such purpose.

14) Composting Toilets

Where the availability of land for installation of conventional septic tank systems is limited so as to allow for only a septic tank and a reduced size absorption field system, composting toilets may be considered. Such units, especially the larger ones, commonly receive garbage and human wastes, which are acted upon by microorganisms, ultimately resulting in the creation of a compost that may be used as a soil amendment. Large composting units can handle toilet and kitchen scraps, while the smaller self-contained units only accept toilet wastes (see Figure 7.D). Laundry, bath, and kitchen wastes must be disposed of in a conventional septic tank system, although the size of the absorption field may be reduced by 35 percent from that required for a conventional system, provided devices which restrict flow to no more than 3 gpm on shower heads and other appropriate water-using fixtures are installed. Composted wastes from the treatment unit shall be removed as per the manufacturer's recommendations and the residue shall be buried by covering with at least six inches of soil. Wastes should not be used as fertilizer for root or leaf crops, which may be eaten raw. All manufacturers' recommendations shall be followed as to the installation, operation and maintenance requirements of the units. Composting toilets must be certified by the National Sanitation Foundation as meeting the current Standard # 41 or certified by the manufacturer as meeting a nationally recognized standard for such purpose.

15) Water Saving Devices and Fixtures

The County Board of Health may consider a proposal to reduce estimated daily sewage flow where it is clearly established that workable, effective water saving devices will be installed. An example would be the use of low water use toilets in facilities where essentially all of the waste generated is from toilet use.

16) Separate Black Water - Gray Water Systems

A. *Gray Water Tank Sizing* - Where a separate gray water system is to be used, the minimum effective capacity of the gray water retention tank shall be 500 gallons. Otherwise the design shall meet the requirements of "Section 511-3-1-.05 Rules for On-Site Sewage Management Systems." If a gray water system is to be used for residential development, for each bedroom over four (4), an additional one hundred and thirty (130) gallons capacity shall be provided. Gray water retention tank capacities for commercial or industrial developments shall be computed by taking 65% of the total sewage flow, using the sewage flow schedule (see Pages J-1 through J-3).

B. *Black Water Disposal* - There are a number of devices which can be used to treat or dispose of the black water waste, such as composting toilets, incinerator toilets, absorption fields or mound systems, etc. However, if absorption is selected as the disposal method, the absorption area shall be preceded by a conventional septic tank designed according to Section 511-3-1-.05 "Rules for On-Site Management Systems."

C. *Non-Residential Facilities* - The minimum absorption area for gray water or black water absorption systems serving commercial, industrial, or similar facilities shall be based on the total daily sewage flow (Section J) and percolation coefficient calculations (Table 9.F).

The black water portion of the total daily sewage flow shall be thirty-five percent (35%) and the gray water portion shall be sixty-five percent (65%).

D. *System Sizing* - The minimum absorption area for gray water or black water absorption systems serving residential properties (single family and multifamily) shall be based on the number of bedrooms and the percolation rate (see Table 10.F, for single family homes and Table 9.F for multifamily homes). The black-water portion of the total daily sewage flow shall be thirty-five percent (35%) and the gray water portion shall be sixty-five percent (65%).

17) Privies

A. *Location* – Pit privies shall be located downgrade and not less than 100 feet from any well or spring used as a source of water supply for domestic use and human consumption and not less than 20 feet from any property line. Pit privies shall meet all additional absorption field setback requirements.

B. *Size of Pit* – The pit shall be an excavation approximately three feet six inches square and not less than three feet deep or greater than five feet.

C. *Floor and Riser* – A floor at least four feet square with a riser and lid shall be placed over the pit in such a manner as to prevent access of rodents and insects to the pit. The seat lid shall be hinged as to close automatically and remain closed when not in use.

D. *Earth Backfill* – Sufficient tamped earth fill shall be placed around the base of the pit privy in such a manner as to prevent surface water from entering the pit.

E. *Use* – Privies may be constructed, installed or used for sewage storage and disposal where water under pressure is not available within the building structure or where approved gray water disposal systems are provided. Use of the pit privy shall be discontinued and the pit filled with earth when the contents of the pit accumulate to within 18 inches of the ground surface. (See Figure 10.D for pit privy design). Vault type privies may be pumped out.

F. *Soil Evaluation* – A soil report consisting of soil characteristics, including; soil types and capabilities; frequency and evaluation of seasonal high ground water tables, occurrence of rock, and/or other impervious strata shall determine whether a pit privy will be approved for installation (See Section C).

18) Grease Traps

A. *Description* – In certain commercial / institutional applications, grease can clog sewer lines and inlet and outlet structures in septic tanks, resulting in restricted flows and poor septic tank performance. The purpose of a grease trap is simply to remove grease from the waste stream prior to treatment. Grease traps are tanks into which grease flows and is retained. Grease floats to the water surface while the cleaner water underneath is discharged to a septic tank. The type of grease traps discussed here are outside tanks. Grease trap tank design is similar to that of a septic tank (See Figures 8.D and 9.D).

B. *Application* – Influents to grease traps usually contain high organic loads including grease, oils, fats and dissolved food particles. Grease traps are used for treating wastewater when

the grease content is in excess of 50 mg/l. This primarily occurs with kitchen wastewater from cafeterias, restaurants, hospitals, schools and other institutions with kitchens that produce a large volume of wastewater. Sanitary wastewater should not be treated through the grease trap. Wastewater from garbage grinders should not be discharged to the grease trap, as higher solids loadings can upset grease trap performance and increase solids accumulation.

C. *Factors Affecting Performance* – Several factors can affect the performance of grease traps: wastewater temperature, solids concentrations, inlet conditions, retention time and maintenance practices. By placing the grease trap close to the source of the wastewater generator (usually kitchen), where the wastewater is still hot, allows the grease to flow into the grease trap before congealing. As the grease cools in the grease trap, grease separation is facilitated. Flow control fittings may be needed on the inlet side of smaller grease traps to protect against overloading or sudden surges. These surges can cause agitation in the trap, impede grease floatation and allow grease to escape through the outlet. High loading and short retention time may not allow grease to separate fully, resulting in poor removal. Therefore, it is important to properly size the grease trap for the expected peak flow generated by the facility served. Maintenance practices are important, as failure to properly clean and remove grease accumulation can result in excessive buildup that can lead to the discharge of grease into the system.

D. *Sizing* – The following sizing equations have been developed through years of field experience for restaurants and other types of commercial kitchens. See examples for the use of the appropriate formulas. The minimum size grease trap should be 125 gallons.

1. *Restaurants:*

(S) x (GS) x (HR/12) x (LF) = GT capacity

S = Number of seats in dining area

GS = Gallons of wastewater per seat (Use 25 gallons per seat)

HR = Number of hours open

LF = Loading Factor

2.0 Interstate freeway

1.5 Other freeway

1.25 Recreational area

1.0 Main highway

0.75 Other highways

Example 1: For a restaurant with a 75 seat dining area, 12-hour day operation, a typical discharge of 25 gallons per seat and located on a main highway, the size of the grease trap is calculated as follows:

(75) x (25) x (12/12) x (1.0) = 1875 gal. capacity

2. *Hospitals, Nursing Homes, Other types of Commercial Kitchens with varied seating:*

(M) x (GM) x (LF) = GT capacity

M = Meals per day

GM = Gallons per meal (Use 5 gallons per meal)

LF = Loading Factor

1.0 with dishwashing

0.5 without dishwashing

Example 2: A nursing home with 100 beds, serves 300 meals per day, a discharge of 5 gallons per meal and a loading factor with dishwashing of 1.0. The size of the grease trap is calculated as follows:

(300) x (5) x (1.0) = 1500 gal. capacity

E. *Construction Features* – Grease traps are generally made of precast concrete, and are purchased completely assembled. However very large units may be field constructed. Minimum design requirements for precast concrete septic tanks apply to concrete grease trap except as discussed here in Section D and as shown in Figures 8.D and 9.D. Grease traps are usually buried so as to intercept the building sewer. They must be level, located where they are easily accessible for cleaning and close to the wastewater source. Where efficient removal of the grease is very important, a two-chamber grease trap design may be used which has a primary grease separating chamber. The inlet, outlet and baffle fittings are typical of "Tee" design with a vertical extension 12 inches from the tank floor and reaching well above the water line. To allow for proper maintenance, access to finish grade must be provided. The access covers should be gas tight construction and should be designed to withstand expected loads. A check of local plumbing ordinances and codes should always be made before the grease trap is designed or purchased.

Other design considerations include: facilities for insuring ease of access for cleaning and maintenance; and inaccessibility of the grease trap to insects and vermin.

F. *Operation and Maintenance* – In order to be effective, grease traps must be operated properly and cleaned regularly to prevent the escape of appreciable quantities of grease. The frequency of cleaning at any given installation can best be determined by experience based on observation. Generally, cleaning should be done when 75% of the grease retention capacity has been reached. At restaurants, pumping frequencies range from once per week to once every two or three months.

19) Septic Tank Riser and Lid Systems

A. *Concrete Riser and Lid Systems* - Septic tanks with more than 12 inches of soil cover are required to use a riser to bring the tank access to within 12 inches of the grounds surface. The following minimum design, material, and construction standards are applicable to septic tank riser and lid systems manufactured using concrete:

1. Risers shall be made of concrete having a minimum 28-day compressive strength of 4,000 PSI.
2. Risers shall be flanged to facilitate stacking for varying tank depths and shall be attached to the top of the tank by means of butyl mastic or equivalent approved sealant. Individual stacked riser sections shall be jointed with butyl mastic or equivalent approved sealant.
3. Riser walls shall have a minimum thickness of 2 inches.
4. All precast concrete risers shall be reinforced with either 6 x 6 inch, # 10 gauge welded wire mesh or reinforcing fiber designed specifically as a secondary concrete reinforcing material.
5. Riser lids must contain 6 x 6 inch, #10 gauge welded wire mesh as a minimum reinforcing and must maintain a minimum thickness of 3 ½ inches. Riser lids may be designed to fit either as a wedge into the top of the riser or as a flanged seat. All lids must be provided with a handle of 3/8-inch (#3) rebar or equivalent rot resistant material. Lid handles shall have at least a 1-inch clearance between the lid top and the closest point of the handle.
6. Riser lids shall be designed to withstand a uniform load of 150 pounds per square foot.
7. Risers that extend to the ground surface shall have a securable lid to prevent unauthorized access. Concrete riser lids may be considered "secured" if the weight of the lid is a minimum of 65 pounds and cannot be removed by horizontal sliding.

B. *Non-Concrete Septic Tank Riser and Lid Systems* - Septic tanks with more than 12 inches of soil cover are required to use a riser to bring the tank access to within 12 inches of the grounds surface. The following minimum design, material, and construction standards are applicable to septic tank riser and lid systems manufactured using materials other than concrete:

1. *Materials* - Materials used in the riser and lid manufacturing process shall be capable of effectively resisting corrosive influences of liquid and gas components of sewage as well as withstanding the physical factors that may affect the structural integrity of the risers. Materials used shall be formulated to withstand vibration, shock, normal household chemicals, by-products of sewage digestion, and expected geostatic and hydrostatic stresses. Verification of the material requirements must be provided by the manufacturer.
2. *Stress testing* - One of the following assembly stress tests must be submitted:
   a. Inches Hg vacuum with minimal joint seal deflection;
   b. Compressive to 2500 lbs. center loading; compressive to 4500 lbs. full assembly and center loading; compressive to 6000 lbs. uniform loading;
   c. Compression to deformation at 500 psi @ 3000 lbs. load or at 1000 psi @ 6000 lbs. load; or
   d. ASTM D-1784 tested in accordance with AASHTO M304M.
3. *Riser Lids* - Riser lids shall withstand the following stress testing:

a. 150 lbs. / sq. ft. uniform live load; and

b. 1500 pound 10 by 10-inch area center loading in accordance with ASTM C- 890.

4. *Verification* - Stress testing shall be verified in writing by a Registered Engineer.

5. *Security* - Provision shall be made in the construction of septic tank riser lids to prevent unauthorized entry or removal when the access openings are at or above ground level. Lids must be fastened to the riser by use of stainless steel nuts and bolts or other approved lockout mechanism.

6. *Watertight Assembly* - Riser and lid systems shall be so constructed as to be watertight. Risers and lids shall be sufficiently tight when installed to preclude the entrance of surface or ground water into the tank for the designed life of the assembly. Riser segments and lid attachment must include an o-ring gasket or bead of mastic to seal all joints. Sealants shall be capable of effectively resisting corrosive influences of liquid and gas components of sewage as well as withstanding the physical factors that may affect the structural integrity of the riser system. Materials used shall be formulated to withstand vibration, shock, normal household chemicals, by-products of sewage digestion, and expected geostatic and hydrostatic stresses.

7. *Attachment to tank* - For installation on new concrete tanks, plastic risers must be attached by means of an integrally (cast in place) molded casting ring. Installation of risers onto existing tanks may be achieved with the use of a bolt-on attachment ring, adhesive mastic, or epoxy adhesive compatible with the riser material. Risers that are part of a tank manufacturer's proprietary integrated tank and riser system may be attached by screw type threads molded into the tank and riser or other approved connection method.

8. *Workmanship* - Risers and lids shall be free from defect that may affect their serviceability or durability.

9. *Listing* – Upon request, the Department will review riser and lid system products; when the Department determines data provided by the manufacturer demonstrates the product meets or exceeds established design and material requirements, it will be added to the official Product Approvals List. All non-concrete septic tank riser and lid systems must be approved by the Department for use in Georgia.

20) Tables, Figures, Forms

Table 4.D Performance Standards/Testing Protocol for Aerobic Treatment Units

ATU Performance Objective	Wastewater Influent	Wastewater Effluent	Test Protocol
NSF Class I	$CBOD_5$ (4): 100-300 mg/L (2)	$CBOD_5$: 25mg/L (2)	NSF 40 (1)
	TSS (5): 100-350 mg/L (2)	TSS: 30 mg/L (2) 45 mg/L (3)	
	pH: No Standard	pH: 6.0 - 9.0	
	No Bacterial Standard	No Bacterial Standard	

(1) NSF International Standard for Wastewater Technology/Residential Wastewater Treatment Systems
(2) 30-day average
(3) 7-day average
(4) Combined 5-day Carbonaceous Biochemical Oxygen Demand
(5) Total Suspended Solids

Figure 5.D Septic Tank Specifications

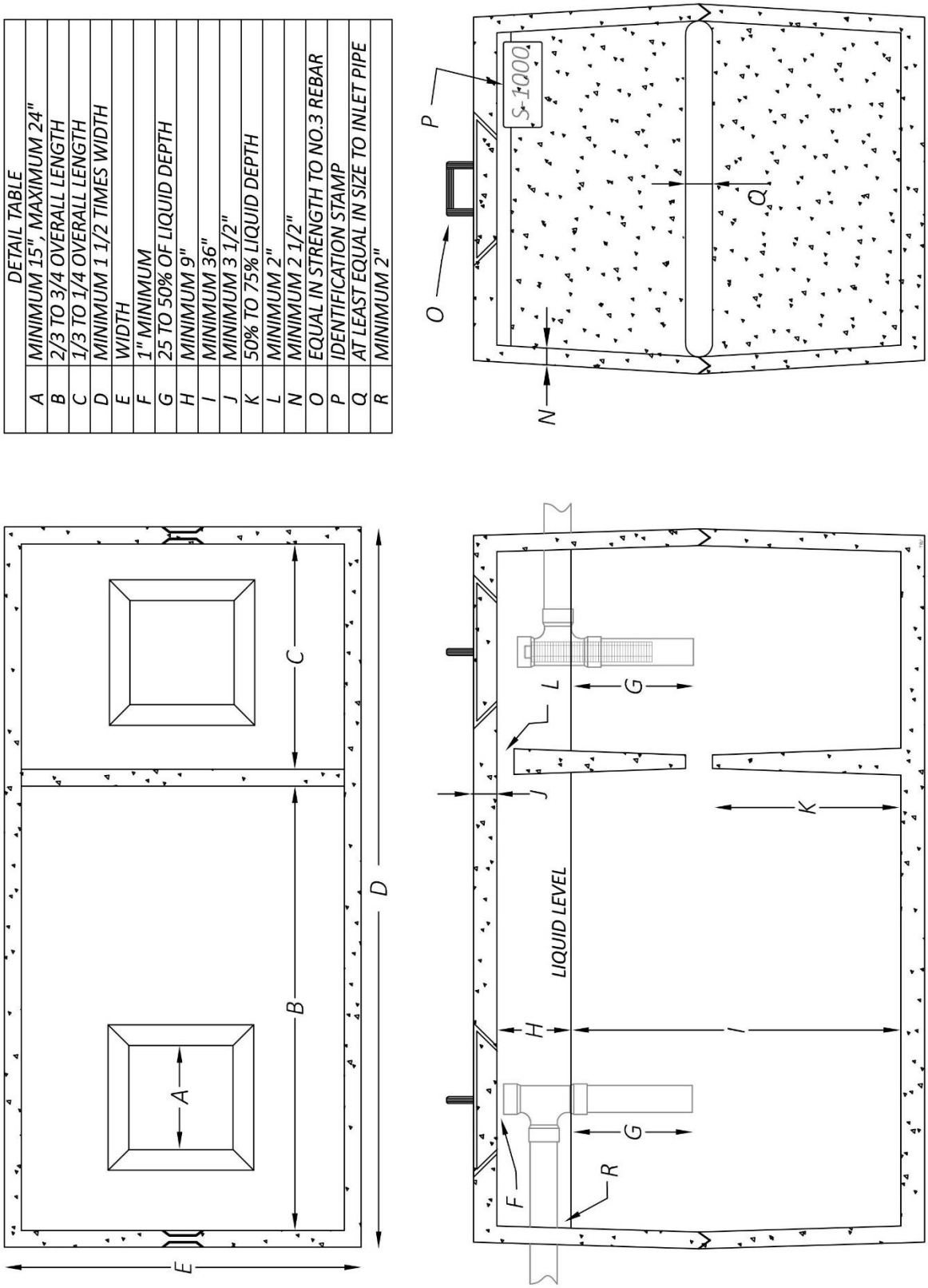

Figure 6.D Aerobic Treatment Unit

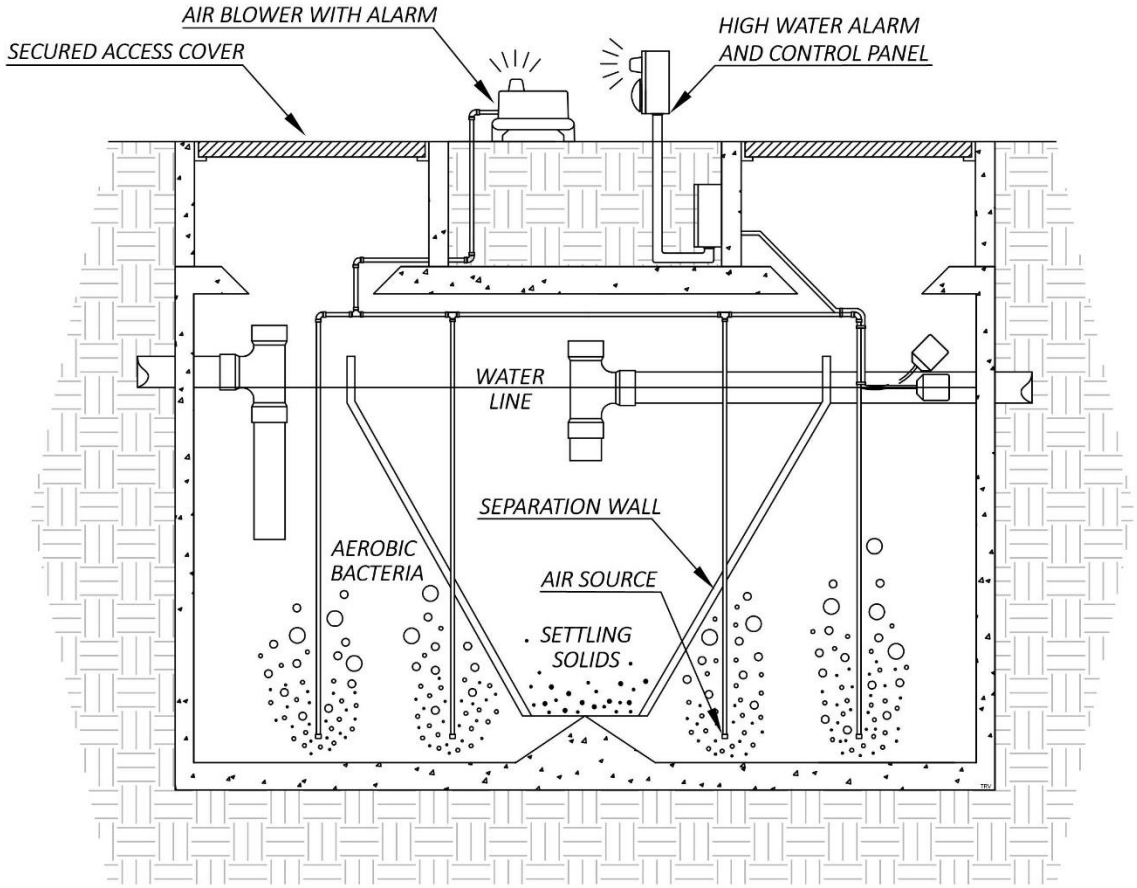

Figure 7.D Typical Composting Toilets

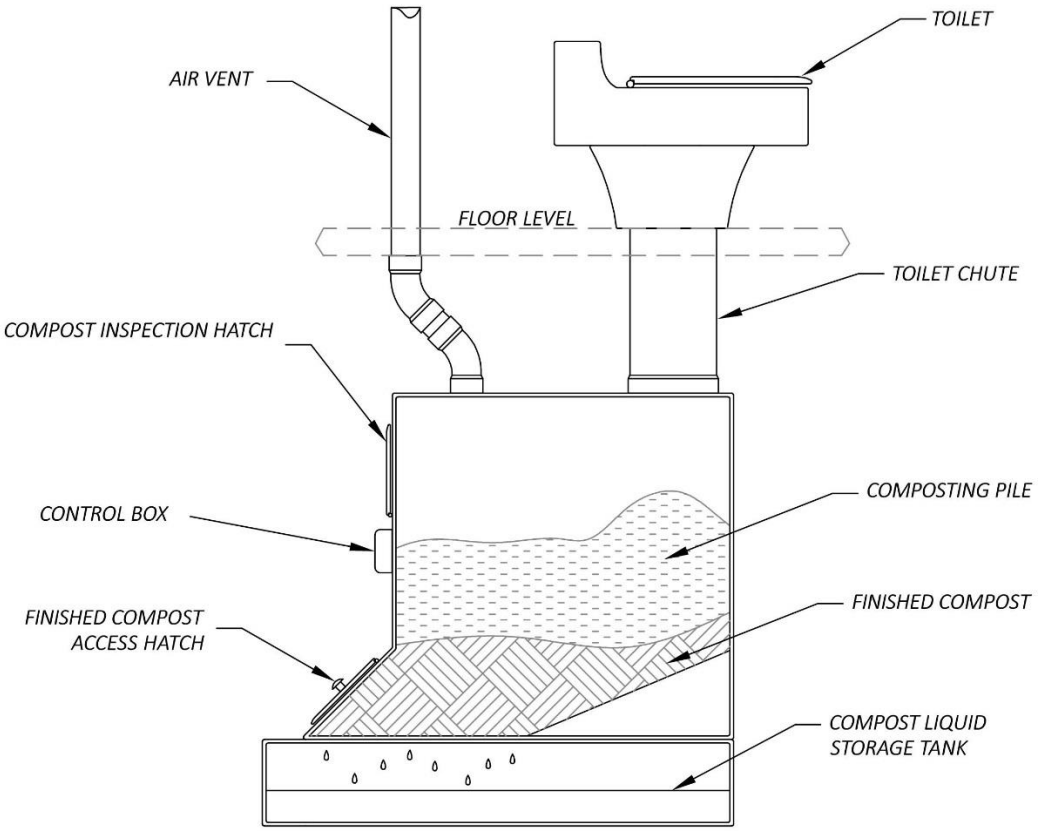

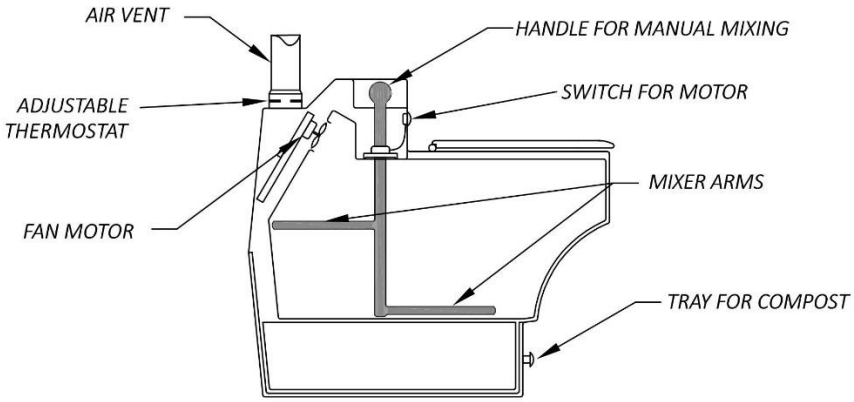

Figure 8.D Standard Grease Trap Detail

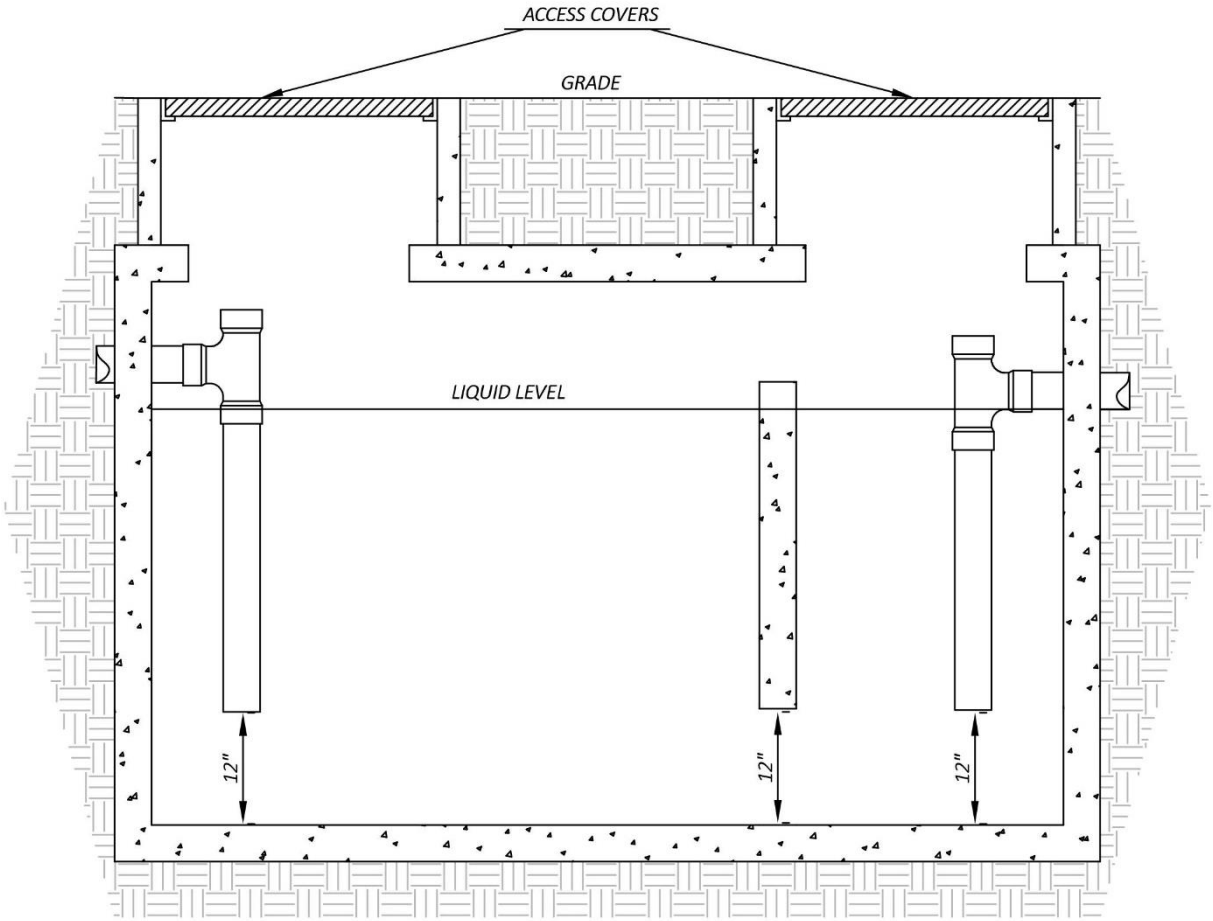

Figure 9.D Septic Tank to Grease Trap Conversion

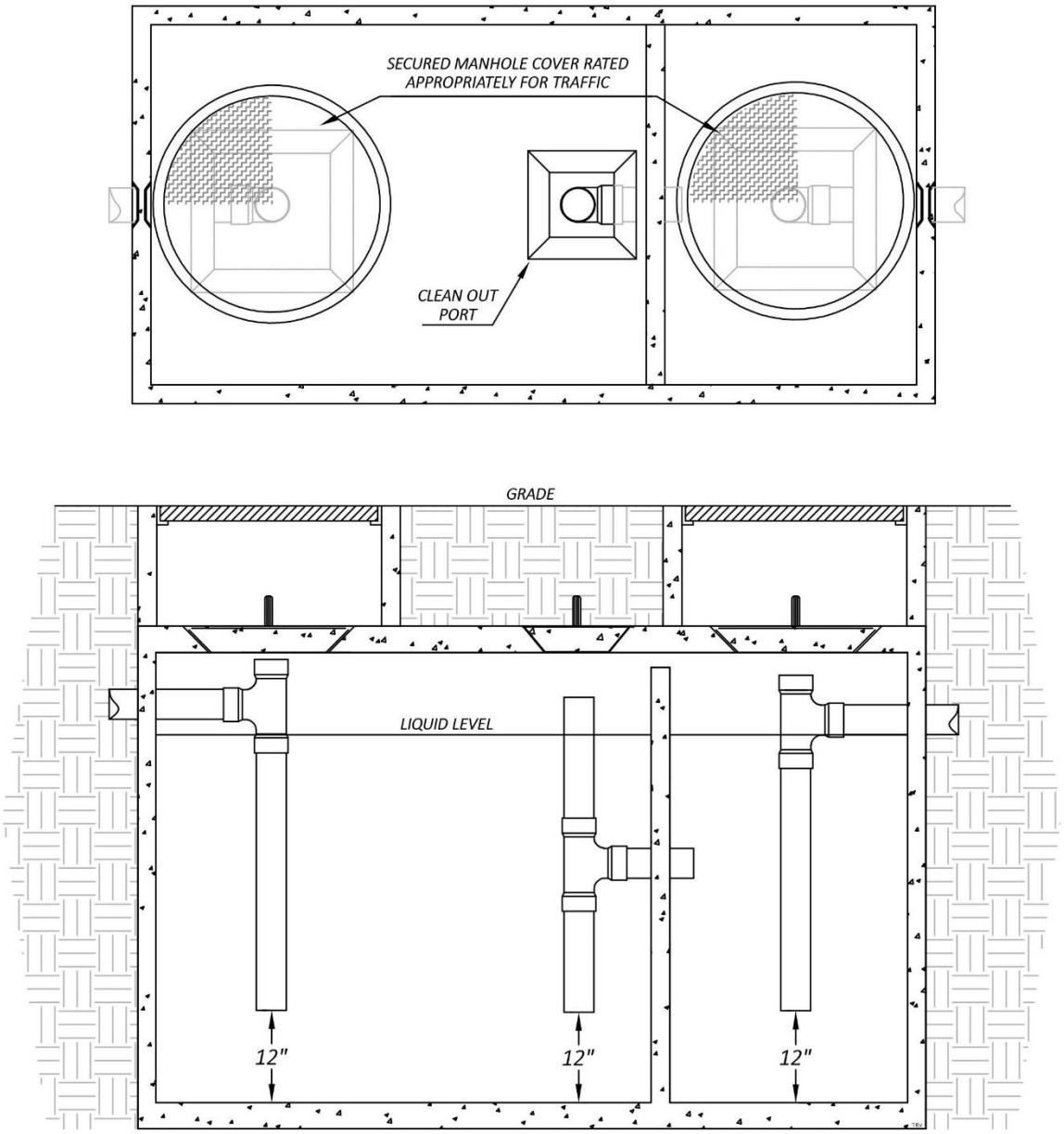

Figure 10.D Pit Privy Design Detail

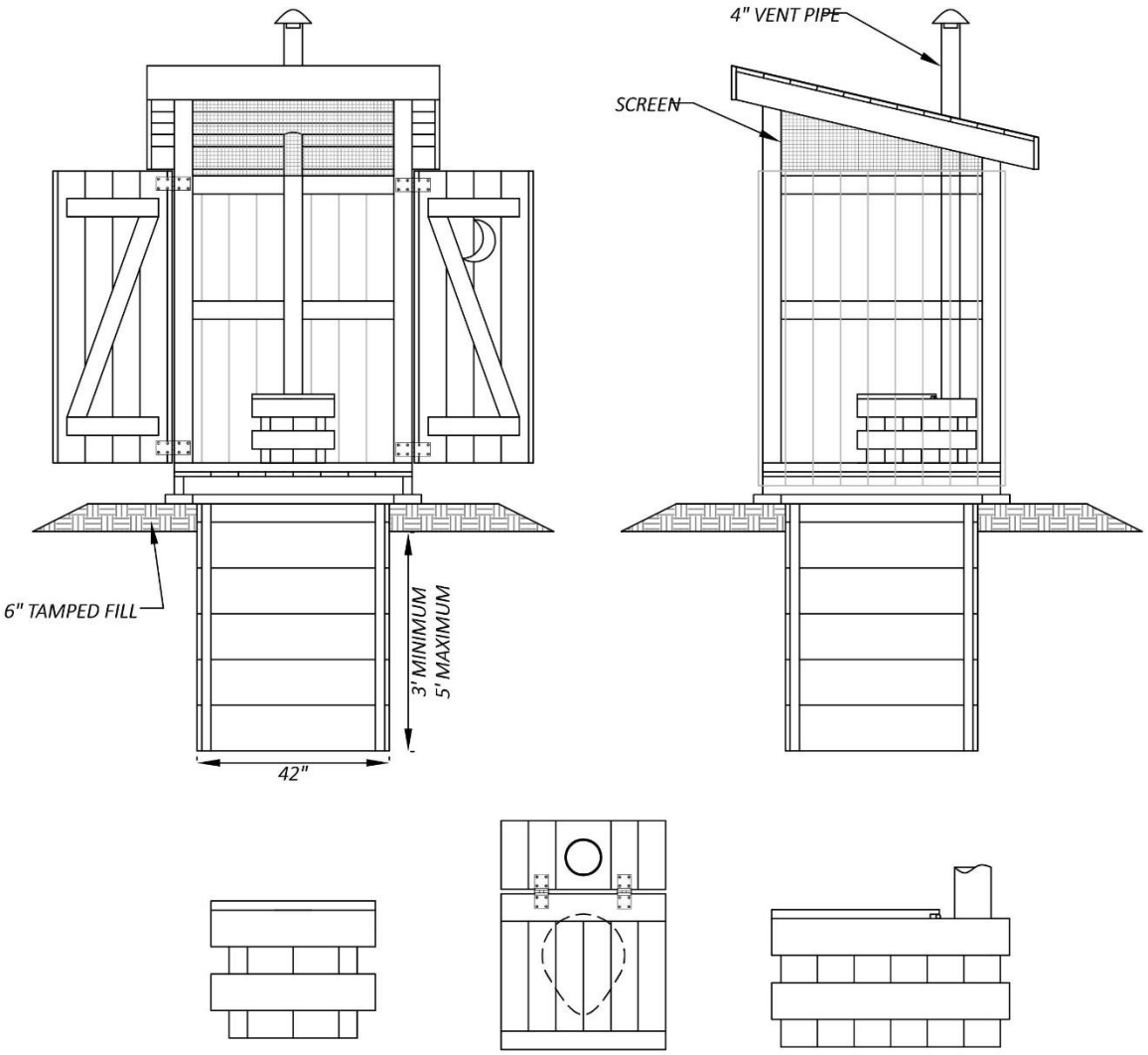

This page intentionally left blank.